# WIRING INSTRUCTION

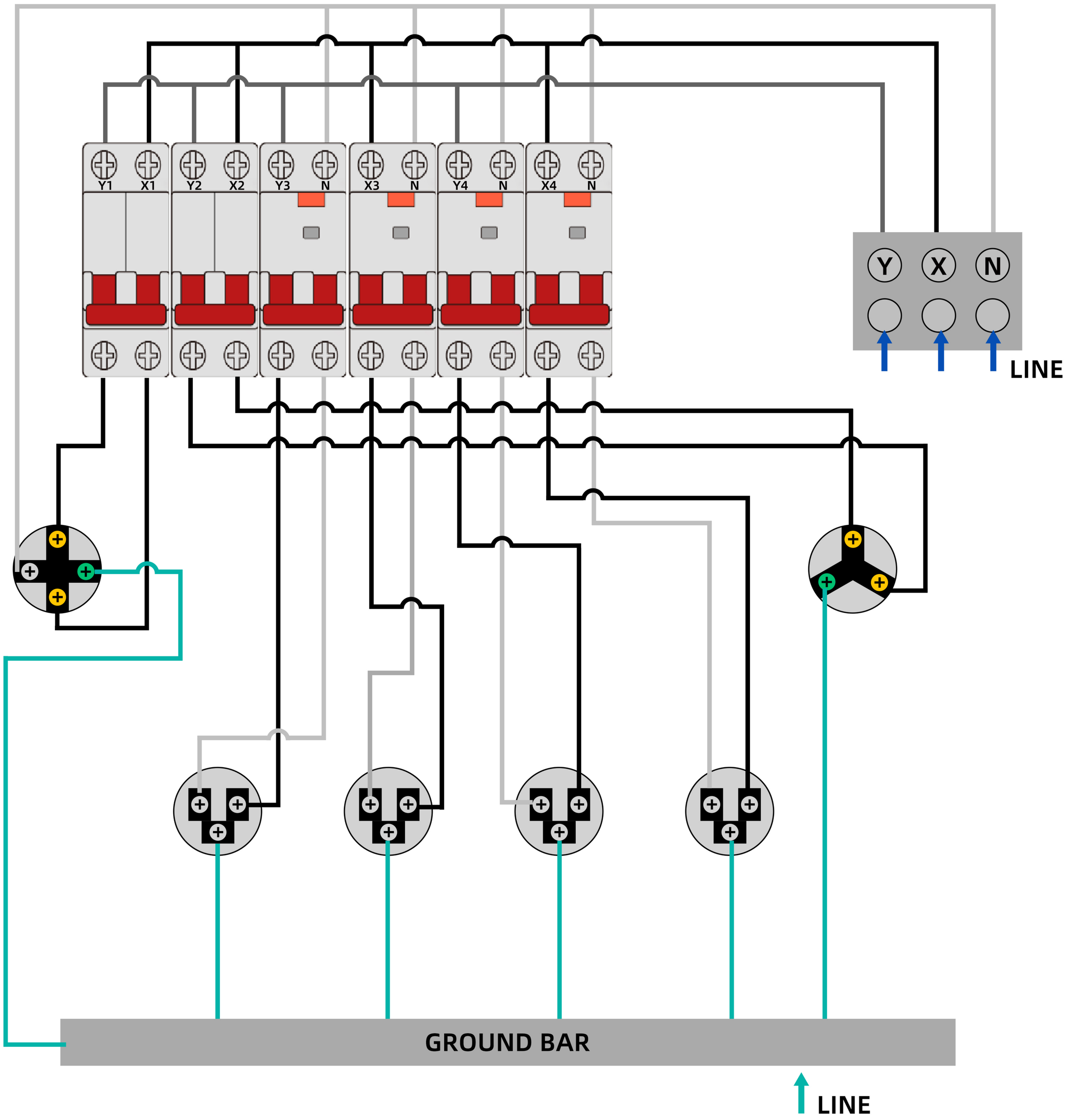


## Specifications

Input Voltage: 125V/250V
NEMA 5-20R Rated Current: 20A

Maximum Rated Current: 30A
NEMA L14-30R / L6-30R Rated Current: 30A

Circuit Breaker Rated Current: 30A/20A
Certified: ETL, UL, CE

NEMA L14-30R/NEMA L6-30R:
Live Wire 10 AWG  Ground Wire 12AWG  Neutral Wire 10AWG

NEMA 5-20R:
Live wire 12AWG  Ground wire 14AWG  Neutral Wire 12AWG